PROPOSED ACCESS TRACK CROSS-SECTION DETAIL

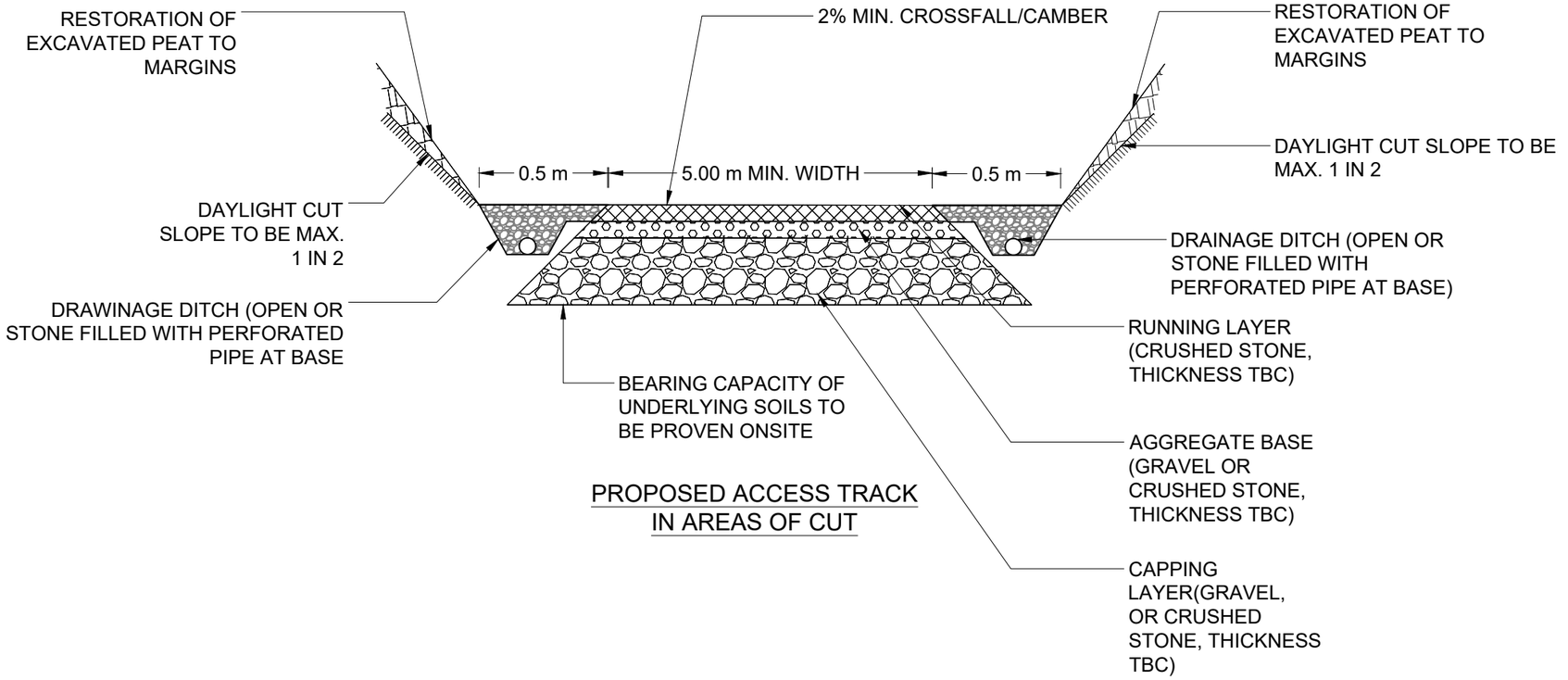

PROPOSED ACCESS TRACK IN AREAS OF CUT

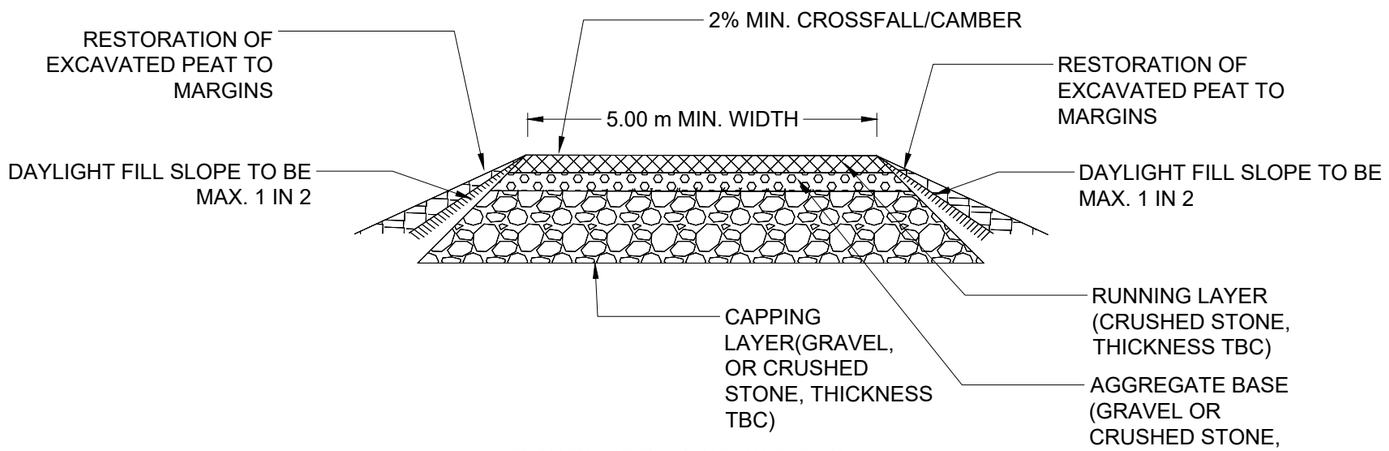

PROPOSED ACCESS TRACK IN AREAS OF FILL

NOTES:

1. ALL DIMENSIONS ARE IN METERS UNLESS OTHERWISE STATED.
2. THIS IS AN INDICATIVE ARRANGEMENT ONLY.
3. FINAL DIMENSIONS TO BE DETERMINED DURING DETAILED DESIGN.

Title: PROPOSED ACCESS TRACK CROSS-SECTION DETAIL

Project: LIMEKILN BESS

Source:

Client:

Drawn by: SPD

Date:	Number:
JULY 2025	11

Scale:	Revision no:
NTS	1

INDICATIVE BESS & PCS FOUNDATIONS PLAN AND SECTIONS

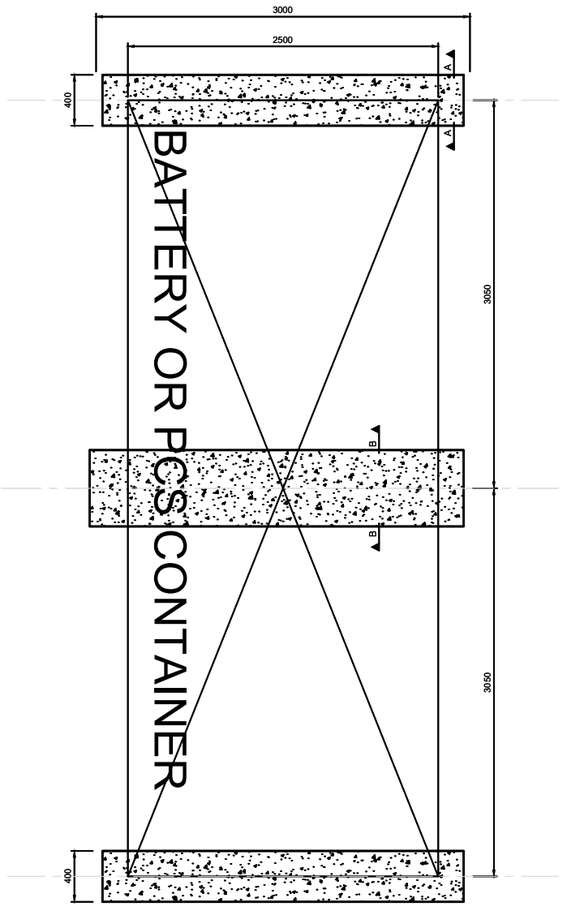

INDICATIVE BESS AND PCS FOUNDATION PLAN

SCALE 1:50 @ A3

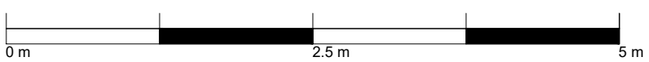

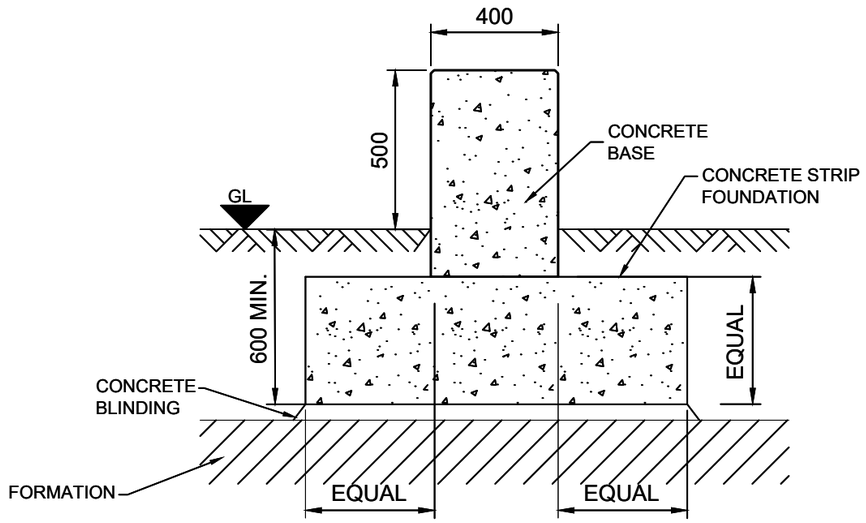

SECTION A-A THROUGH BESS & PCS FOUNDATION

SCALE 1:20 @ A3

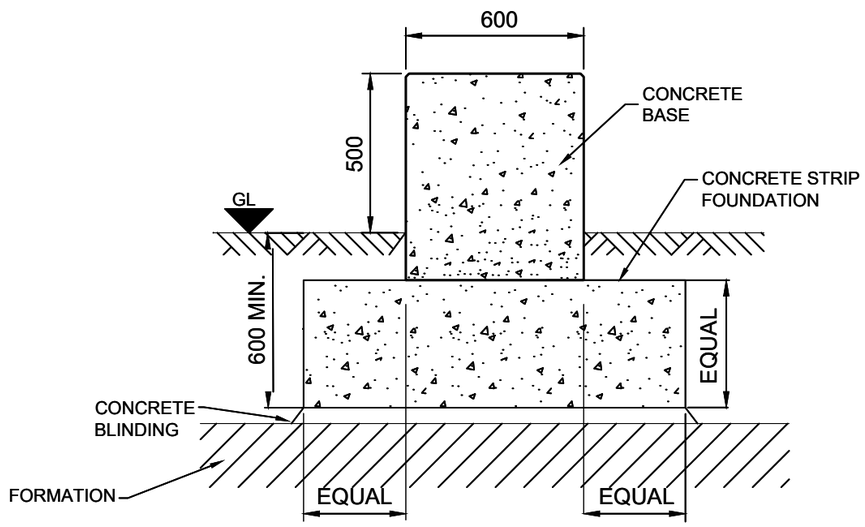

SECTION B-B THROUGH BESS & PCS FOUNDATION

SCALE 1:20 @ A3

NOTES:

1. THIS DRAWING IS INDICATIVE FOR PLANNING PURPOSES ONLY, NOT FOR CONSTRUCTION.
2. FINAL SELECTION OF EQUIPMENT SUBJECT TO DETAILED DESIGN POST PLANNING PERMISSION.
3. DO NOT SCALE FROM THIS DRAWING.
4. DRAWING SHOWS INDICATIVE FOUNDATION DETAILS FOR BOTH BATTERY ENERGY STORAGE SYSTEM (BESS) CONTAINERS AND POWER CONVERSION SYSTEM (PCS) CONTAINERS.
5. DRAWING SHOWS DESIGN INTENT BASED ON STANDARD 8' HIGH CUBE SHIPPING CONTAINER TYPE DESIGN. DIMENSIONS MAY CHANGE IF ALTERNATIVE PCS OR BESS CONTAINER FOOTPRINT IS SELECTED AT DETAILED DESIGN STAGE

Title:
INDICATIVE BESS & PCS FOUNDATIONS PLAN AND SECTIONS

Project:
LIMEKILN BESS

Source:

Client:

Drawn by:
SPD

Date:	Number:
JULY 2025	12
Scale:	**Revision no:**
AS INDICATED @ A3	1

INDICATIVE BESS PLATFORM EARTHWORKS

BORALEX

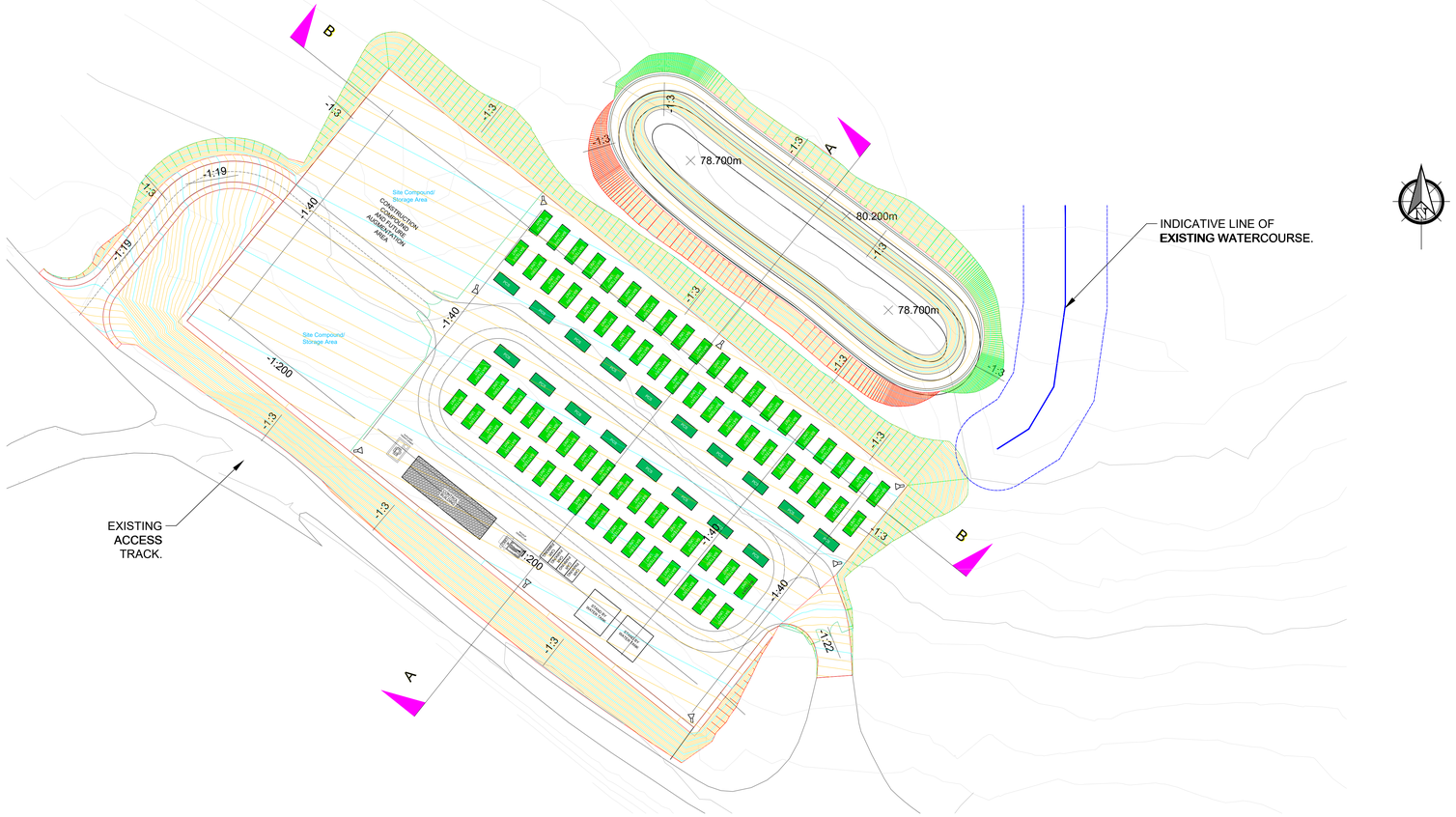

A - LONGSECTION
SCALE: H 1:500,V 1:500. DATUM: 75.000

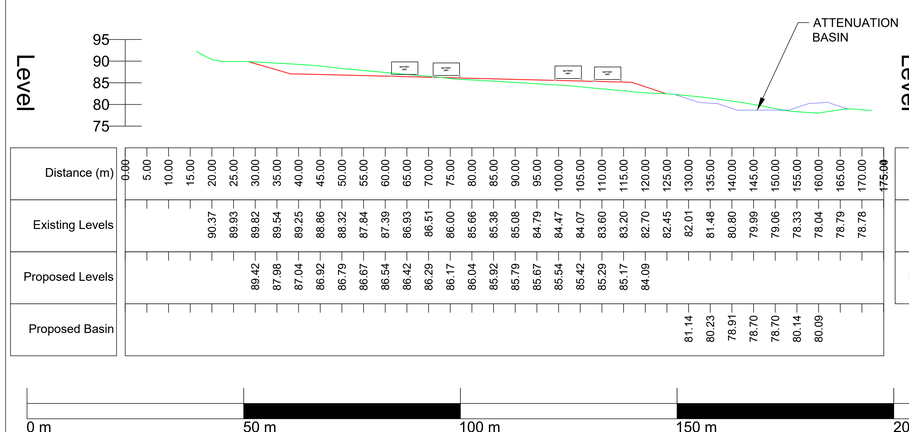

B - LONGSECTION
SCALE: H 1:500,V 1:500. DATUM: 75.000

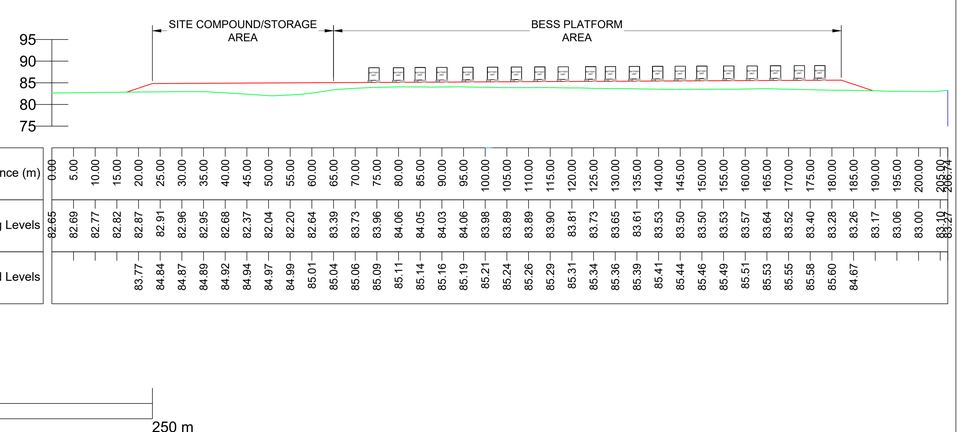

NOTES:

1. DO NOT SCALE FROM THIS DRAWING.
2. DRAWING IS INDICATVE FOR PLANNING, AND NOT FOR CONSTRUCTION.
3. DRAWING IS INDICATIVE ONLY AND FEATURES SHOWN MAY VARY FROM FINAL DESIGN. ACTUAL DESIGN TO BE CONFIRMED AT DETAILED DESIGN STAGE. CONSTRUCTION TO BE COMPLETED IN ACCORDANCE WITH RELEVANT STANDARDS DEFINED IN DETAILED DESIGN.
4. EXISTING GROUND LEVELS BASED ON 5km DTM TERRAIN AND AS-BUILT DATA. EXISTING LEVELS TO BE CONFIRMED BY DETAILED TOPO SURVEY PRIOR TO CONSTRUCTION.

KEY

- CONTROL BUILDING
- BESS CONTAINER
- BESS INVERTER AND TRANSFORMER CONTAINER (PCS)
- PALLISADE FENCE
- FIRE WATER STORAGE TANK

Title:
INDICATIVE BESS PLATFORM EARTHWORKS

Project:
LIMEKILN BESS

Source:

Client:

Drawn by:
SPD

Date:	**Number:**
JULY 2025	13
Scale:	**Revision no:**
1:500 @ A0	1

BORALEX

INDICATIVE SUBSTATION PLATFORM PLATFORM EARTHWORKS

BORALEX

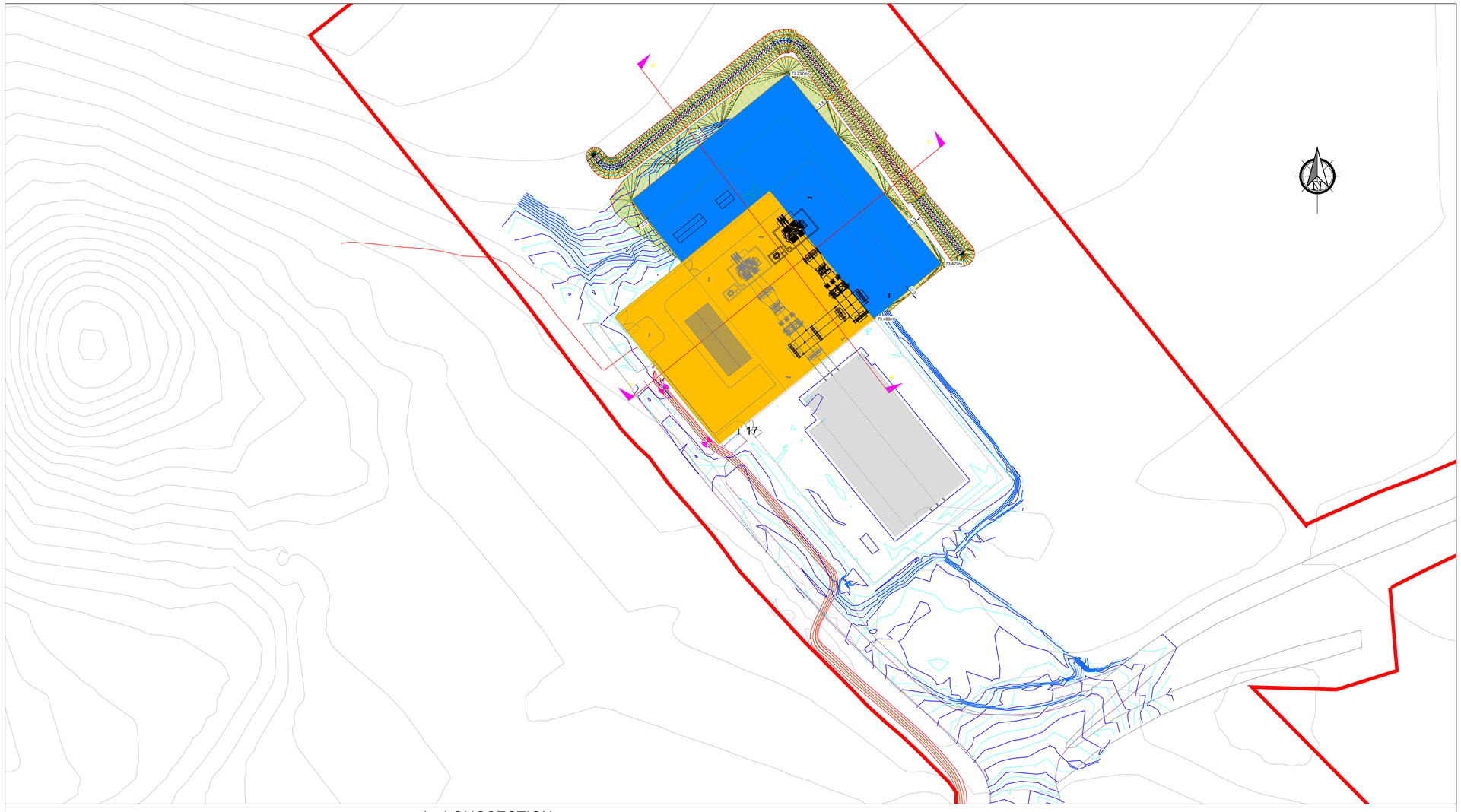

NOTES:

1. DO NOT SCALE FROM THIS DRAWING.
2. DRAWING IS INDICATVE FOR PLANNING, AND NOT FOR CONSTRUCTION.
3. DRAWING IS INDICATIVE ONLY AND FEATURES SHOWN MAY VARY FROM FINAL DESIGN. ACTUAL DESIGN TO BE CONFIRMED AT DETAILED DESIGN STAGE. CONSTRUCTION TO BE COMPLETED IN ACCORDANCE WITH RELEVANT STANDARDS DEFINED IN DETAILED DESIGN.
4. EXISTING GROUND LEVELS BASED ON 5km DTM TERRAIN AND AS-BUILT DATA. EXISTING LEVELS TO BE CONFIRMED BY DETAILED TOPO SURVEY PRIOR TO CONSTRUCTION.
5. REFER TO DRAWING NO. 5 AND NO. 7 FOR DETAILS OF SUBSTATION EXTENSION PLANS AND ELEVATIONS.

KEY

- SITE BOUNDARY.
- AREA OF EXISTING SUBSTATION PLATFORM.
- PROPOSED EXTENSION TO EXISTING SUBSTATION PLATFORM.
- PALLISADE FENCE.
- EXISTING ACCESS TRACK.

A - LONGSECTION
SCALE: H 1:500,V 1:500. DATUM: 70.000

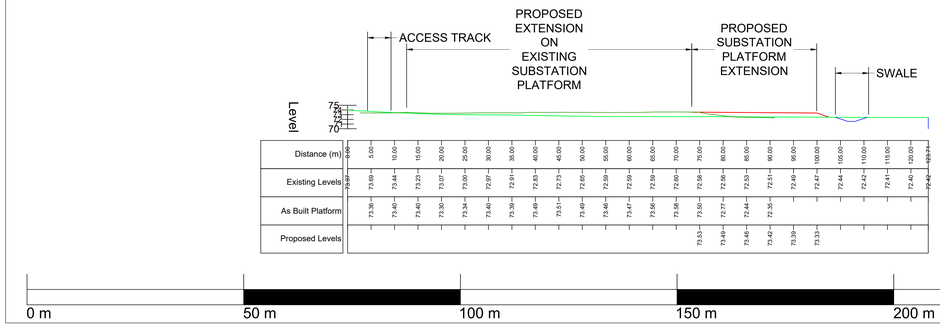

B - LONGSECTION
SCALE: H 1:500,V 1:500. DATUM: 70.000

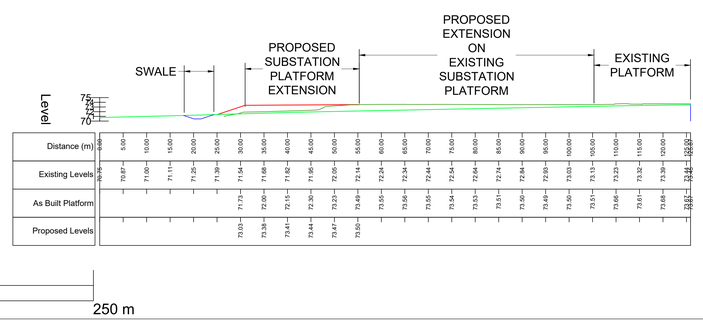

Title:
INDICATIVE SUBSTATION EXTENSION PLATFORM EARTHWORKS DRAWING

Project:
LIMEKILN BESS

Source:

Client:

Drawn by:
SPD

Date:	Number:
JULY 2025	14
Scale:	**Revision no:**
1:500 @ A0	1

BORALEX

INDICATIVE FENCE DETAIL

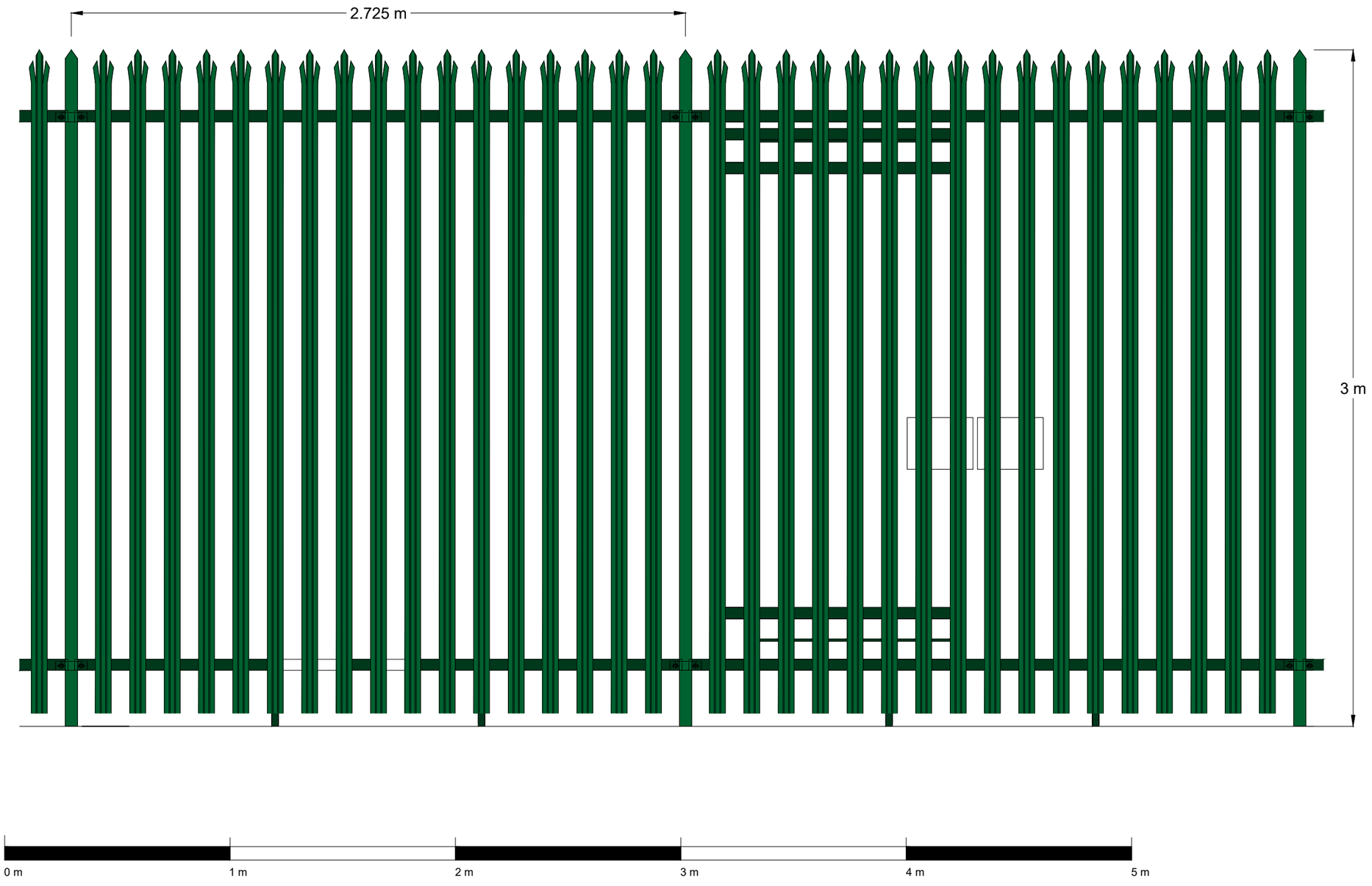

NOTES:

1. THIS DRAWING IS INDICATIVE FOR PLANNING PURPOSES ONLY.
2. FINAL SELECTION OF EQUIPMENT SUBJECT TO DETAILED DESIGN POST PLANNING PERMISSION.
3. COLOUR IS INDICATIVE AND TBC DURING DETAILED DESIGN.

Title:
INDICATIVE FENCE DETAIL

Project:
LIMEKILN BESS

Source:

Client:

Drawn by:
SPD

Date:	**Number:**
JULY 2025	15
Scale:	**Revision no:**
1:20 @ A3	1

INDICATIVE LIGHTING AND CCTV COLUMN DETAILS

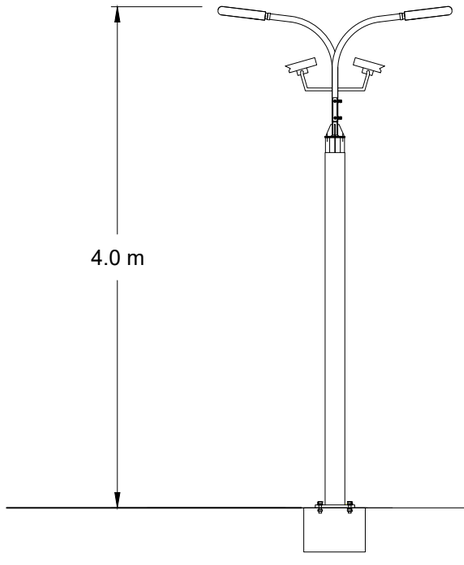

BESS AREA LIGHTING / CCTV COLUMN DETAIL

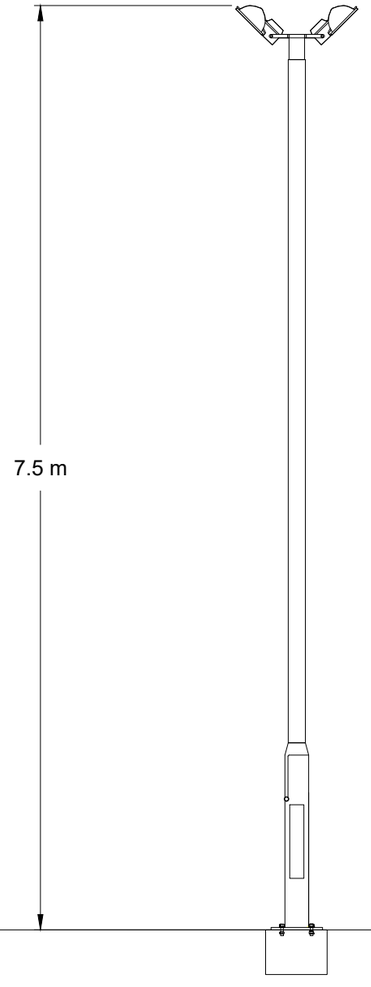

SUBSTATION EXTENSION COLUMN DETAIL

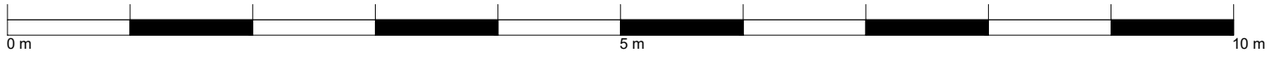

NOTES:

1. THIS DRAWING IS INDICATIVE FOR PLANNING PURPOSES ONLY.
2. FINAL SELECTION OF EQUIPMENT SUBJECT TO DETAILED DESIGN POST PLANNING PERMISSION.
3. 10 m HIGH LIGHTING COLUMNS IN SUBSTATION IDENTICAL TO THOSE ALREADY IN USE, TO BE USED FOR TASK LIGHTING ONLY AND NOT PERMANENT ILLUMINATION.
4. LIGHTING IN BESS AREA TO BE USED FOR SAFETY LIGHTING DURING MAINTENANCE AND FOR SECURITY LIGHTING WHEN SECURITY SYSTEM IS ARMED AND SHALL BE LOW LUX LEVEL GUIDANCE LIGHTING ONLY.
5. BESS AREA LIGHTING SHALL USE CCTV SYSTEM TO TRIGGER SECURITY LIGHTING TO LIMIT NUISANCE SWITCHING.

Title:
INDICATIVE LIGHTING AND CCTV COLUMN DETAILS

Project:
LIMEKILN BESS

Source:

Client:

Drawn by:
SPD

Date:	Number:
JULY 2025	16
Scale:	**Revision no:**
1:50 @ A3	1